MOUNTING KIT
53375-MKPB

W2500 Ram 4x4 (Except Sport) 2003-2012
W3500 Ram DRW 4x4 (Except Sport) 2003-2012

(Note: For the snowplow lights this kit requires: 800037AXV Light kit and Adapter kits:

- For year 2003-2005, 767052 Adapter Kit (vehicle's headlamp bulb H9007),

- For year 2006-20011, 800034 Adapter Kit (vehicle's headlamp bulb H13) and Turn signal relay kit 800038)

Ground Clearance Note: Diesel models 2011+, as received from the manufacturer, have an intercooler (the cooler lines) very low, therefore it does not allow the spreader bar to be installed in the highest holes (the spreader pin hole should be located 14 1/2" (+/- ½") of the ground). Suspension modifications may be required in order to achieve sufficient ground clearance to install a snowplow.

MOUNTING KIT
53375-MKPB-QLII

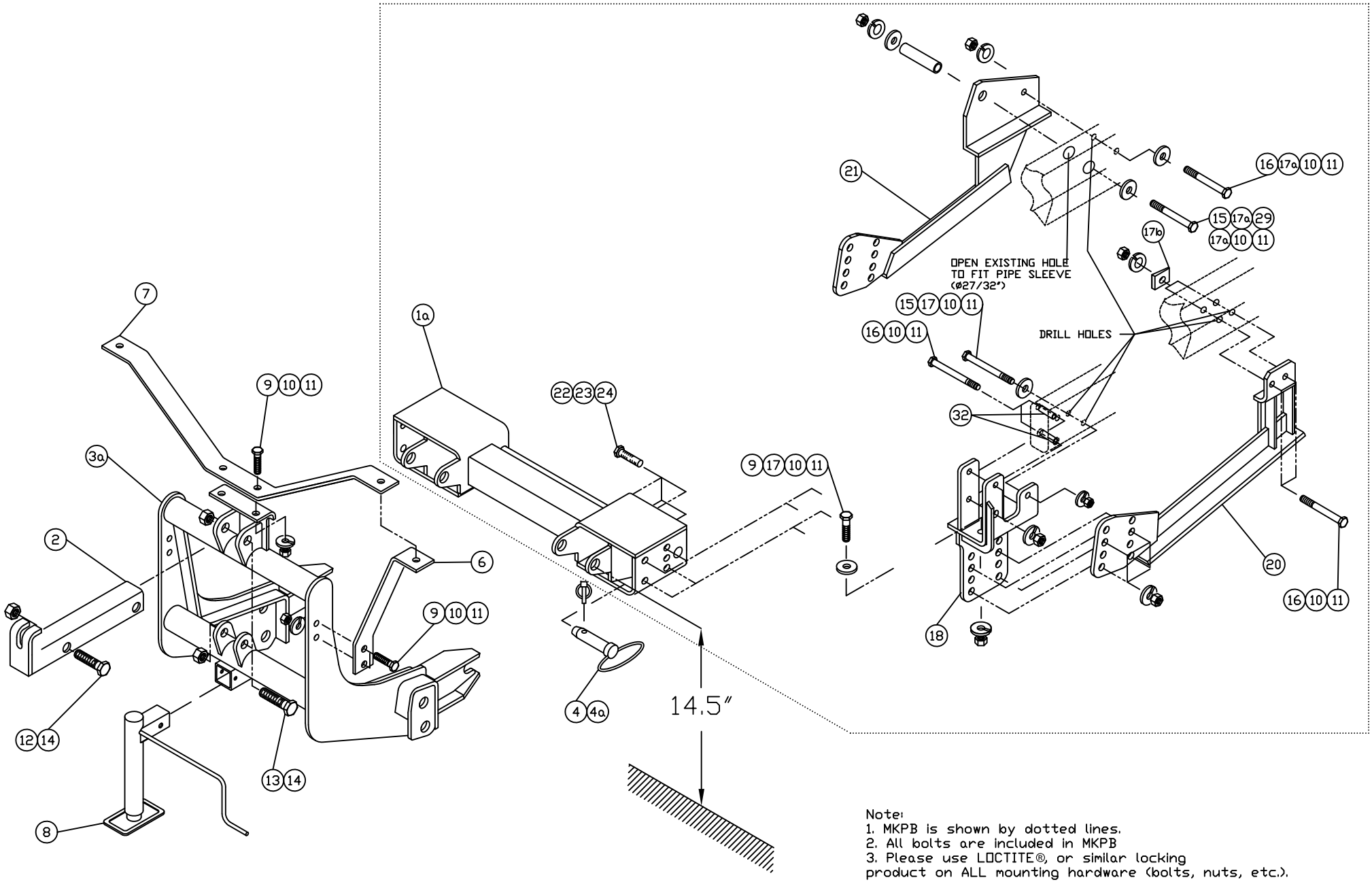

Note:
1. MKPB is shown by dotted lines.
2. All bolts are included in MKPB
3. Please use LOCTITE®, or similar locking product on ALL mounting hardware (bolts, nuts, etc.).

Mounting Kit 53375-MKPB								
Item	**Part #**	**Description**	**MKPB**	**MKPB-QLII**	**QL-MKB**	**QLII-MKB**	**QLII-HI**	**QLII-HI-DLC**
1*	52310-D	Spreader Bar	1					
1a	52364-C	Spreader Bar QLII		1				
2	50069-C-GA	Lift Channel Galvanized			1			
2a*	52612-B-GA	Lift Channel (2" cylinder) Galvanized						1
3*	52162-C	Lift Frame			1			
3a	53170-D-GA	Lift Frame, QUIK*LINK® II Galvanized				1		
3b*	53171-D-GA	Lift Frame, QUIK*LINK ® II-Hi boy Galvanized					1	
4*	WA-34704-M	Mounting Pin, QLI, Ass’y			2			
4a	52348-M	Mounting Pin, Ass’y				2		
6	52208-B-GA	Light Brace Galvanized			2			
7	52209-B-GA	Light Antler Galvanized			1			
8	52373-M	Jack Assembly				1		
9	HH-00972-090	½" x 1 ½" UNF Hex Head Cap screw	8					
10	HH-00457-001	½" Lock washer	18					
11	HH-00460-002	½" UNF Nut	18					
12	HH-00972-149	3/4" x 2 ½" UNF Hex Head Cap screw	1					
13	HH-00972-153	3/4" x 3 ½" UNF Hex Head Cap screw	2					

Mounting Kit 53375-MKPB								
Item	**Part #**	**Description**	**MKPB**	**MKPB-QLII**	**QL-MKB**	**QLII-MKB**	**QLII-HI**	**QLII-HI-DLC**
14	HH-00973-007	3/4" UNF Thin Collar Lock nut	3					
15	HH-00972-100	½"x 4" UNF Hex Head Cap screw	4					
16	HH-00972-101	½" x 4 ½" UNF Hex Head Cap screw	6					
17	HH-00341-006	½" Flat washer	4					
17a	52565-N	Flat washer ¼” thick	3					
17b	53390-N	½” Beveled Washer	2					
18	53376-01-C	Mounting Bracket, Driver Side	1					
19*	53376-02-C	Mounting Bracket, Curb Side	1					
20	52742-D	Thrust Arm, Driver Side	1					
21	52743-D	Thrust Arm, Curb Side	1					
22	HH-00972-131	5/8" x 2 1/4" UNF Hex Head Cap screw	8					
23	HH-00457-003	5/8" Lock washer	8					
24	HH-00460-001	5/8" Hex Nut	8					
25*	HH-00293-006	1/4"x1" UNC Hex Head Cap screw	4					
26*	HH-00341-002	1/4" Flat washer	4					
27*	HH-00457-006	1/4" Lockwasher	4					
28*	HH-00294-001	1/4" Hex Nut	4					
29	52753-N	Pipe Sleeve, 2 5/8" length	1					

Mounting Kit 53375-MKPB								
Item	**Part #**	**Description**	**MKPB**	**MKPB-QLII**	**QL-MKB**	**QLII-MKB**	**QLII-HI**	**QLII-HI-DLC**
30*	HH-00972-155	3/4" x 4" UNF Hex Head Cap screw			2			
32	52787-A	Pipe Sleeve, ID 11/16", length 1 7/8", with handle	4					

QUIK*LINK is a trademark of Arctic Equipment Manufacturing Corporation
Note: * These items are not shown on the drawing.

GENERAL

Customer must be aware of following:
Arctic Equipment Manufacturing Corporation (Arctic) does not assume liability for damage to your motor vehicle resulting from the attachment or use of an Arctic snowplow. The purchaser assumes all vehicle risk associated with the attachment and operation of this snowplow.
The Arctic snowplow you purchase must be used only on vehicles equipped with the manufacturer's snow plow preparation package. Snow plowing without the original plow preparation package may damage your vehicle. The added weight may impair the operation and control of your vehicle. Snow plowing with a vehicle not recommended for that purpose by the manufacturer may void your new vehicle warranty. If your vehicle is not equipped with an original snow plow preparation package, additional equipment may be necessary before snow plowing. Please consult your vehicle and snowplow dealers prior to the purchase and installation of the snowplow. The installation of such parts however is not a full substitute for the original equipment snowplow preparation package.

Before drilling any holes in the firewall or frame, move brake lines, fuel lines and/or electrical wiring from the path of the drill. Brake and fuel lines must also be clear of any fasteners.

All bolts should be installed from the inside of the truck frame so that the lock washers and nuts are accessible for re tightening (where possible).

If a slotted hole in the truck frame is utilized, then a flat washer must be used under the bolt head. If a flat washer is used under a lock washer use LOCTITE #242. Also use this LOCTITE #242 if existing (vehicle) bolts and nuts are used.

General order of installation:

- install all components (mounting bracket, thrust arm and spreader bar) and all fasteners finger tight (snug) through existing holes,
- drill necessary holes and
- tighten all hardware.

After first use, re tighten all mounting bolts, thereafter check mounting bolt tightness periodically and at the start of the season.

Before proceeding, read instructions carefully and familiarize yourself with the components and hardware.

INSTALLATION INSTRUCTIONS

1. Remove a bumper and tow hooks.

2. Bumper and tow hook mounting brackets are attached to the vehicle frame with two bolts on each side. These two bolts are connected with a bolt plate. Remove nuts and pull bolts away from frame.
   Cut top bolt behind bolt plate so the bolt can be removed through frame. Turn the other bolt and bolt plate down so bolt will pass by radiator to remove it. Remove tow hook brackets (they will not be used again). Do not use the bolt plate.
   Remove inside frame stiffener.

3. Be sure that bumper mounting brackets are in original position. Slide mounting bracket (18)(19) to the vehicle frame. Insert ½" x 4.5” bolts (16) through front mounting plate holes (bumper) (insert pipe sleeves (32) inside of frame so that bolts can go through sleeve) and secure with ½" lockwasher (10) and ½" nut (11).

4. Using 9/16" hole on the bottom of mounting bracket (18)(19) as guide drill 17/32" hole through the bottom of the vehicle frame. Insert ½" x 1 1/2" (9) bolt , ½" flat washer (17) and secure with ½" lockwasher (10) and ½" nut (11).

5. Using 9/16" hole on the side of the mounting bracket (18)(19) as guide drill 17/32" hole through the side of the vehicle frame.

Insert ½" x 4" (15) bolt, ½ flat washer (17) and attach ½" lock washer (10) and ½" nut (11).

6. Fasten spreader bar (1a) and thrust arms (20) & (21) to mounting brackets (18)(19) using 5/8"x2 1/4" bolt (22), 5/8" lockwasher (23) and 5/8" hex nut (24). The spreader pin hole should be located 14-1/2" (+/- ½") of the ground.

7a. When driver side thrust (20) arm is tight up against the vehicle frame, drill two 17/32" holes through the frame using 9/16" hole in thrust arm (20) as guide. Insert ½" x 4.5” bolts (15), beveled washers (17b) ½" lock washer (10) and ½" nut (11).

7b. When curb side thrust arm (21) is tight up against the vehicle frame, open existing hole in the vehicle frame to accept pipe sleeve (29) to 27/32" dia. Insert pipe sleeve (29) from outside and ½" x 4.5" (16) bolt from inside together with ½" flat washer (17a). Also insert from outside of the vehicle frame ½" flat washer (17a), ½" lock washer (10) and ½” nut (11).

7c. Using 9/16" hole on the side of the thrust arm (21) as guide drill 17/32" hole through the side of the vehicle frame. Insert ½" x 4.5" (16) bolt, ½ flat washer (17a) and attach ½" lock washer (10) and ½" nut (11).

8. Torque all fasteners using torque chart. Reinstall bumper as high as possible.

10. Install lift frame (3a) (3b) Slide inside of spreader bar (1a). Insert mounting pin (4a) in top holes of spreader bar (1a).

11. Fasten the light antler (7) to the top of the lift frame (3a) using ½"x1 ½" bolt (9), lock washer (10), ½" nut (11). Do not tighten.
Fasten the light brace (6) to both sides of the lift frame (3a), using ½"x1 ½" bolt (9), lock washer (10), ½" nut (11). Do not tighten. Install plow lamps so that the stud is through the light antler (7) and light brace (6).

12. Torque all fasteners according to torque chart.

13. Fasten lift channel (2) and lift cylinder to the lift frame (3a)(3b) using 3/4"x3 ½" bolts (13) and 3/4" locknut (14). Use 3/4"x 2 ½" bolt (12) and 3/4" locknut (14) to attach lift cylinder or M673F to lift channel (2). NOTE: *Do not over tighten as this assembly must be able to pivot.*

14. Use 1/4"x1" bolt (25), 1/4" flat washer (26), 1/4" lock washer (27) and 1/4" hex nut (28) to fasten blade guides to plow.

15. Return any unused items to the customer so that the vehicle can be returned to its original condition if the snowplow is removed.

16. See separate installation instructions for the hydraulic power unit, wiring and controls.

TORQUE CHART (FT. LB.)		
SIZE	GRADE 5 BOLT	GRADE 8 BOLT
$\frac{1}{4}$ - 28	8	11
$\frac{5}{16}$ - 24	15	22
$\frac{3}{8}$ - 24	28	40
$\frac{7}{16}$ - 20	44	63
$\frac{1}{2}$ - 20	69	97
$\frac{5}{8}$ - 18	138	195
$\frac{3}{4}$ - 16	241	341
Note: Torque values are for plated bolts only		